Tropilex

Relax with a good feeling!

Thanks for your purchase, you're awesome!

Did you know that we donate 1% of your purchase to plant trees worldwide? 🌴

Tropilex® Hammock-stand 'Easy' Double

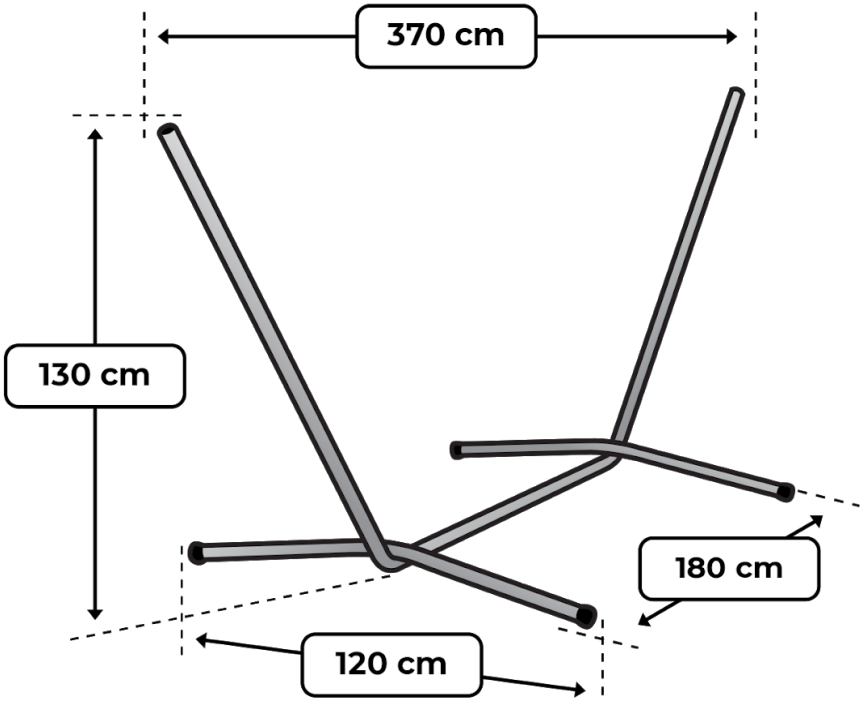

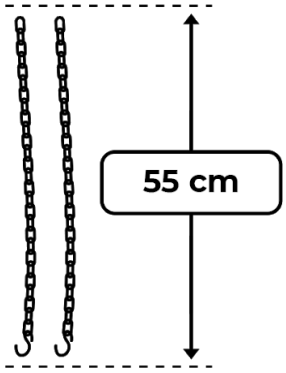

Assembly instructions

Before you can start relaxing you have to invest 5 minutes of time and some sweat to assemble the hammock-stand. We are sorry for that. 😎

Take a look at the parts list...

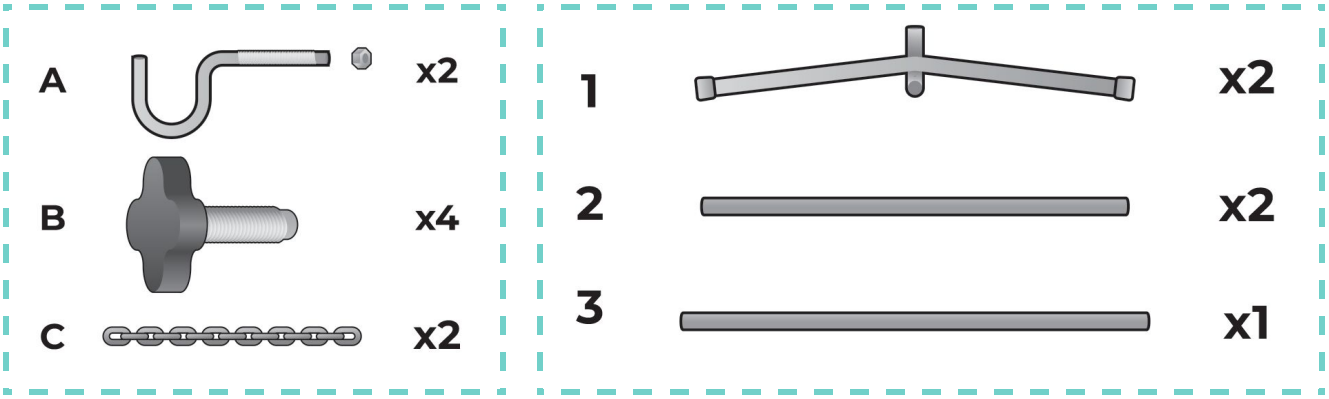

And now, let's put it together...

Note that **Part B** is at the bottom of the stand instead of at the top as shown in the image.

1

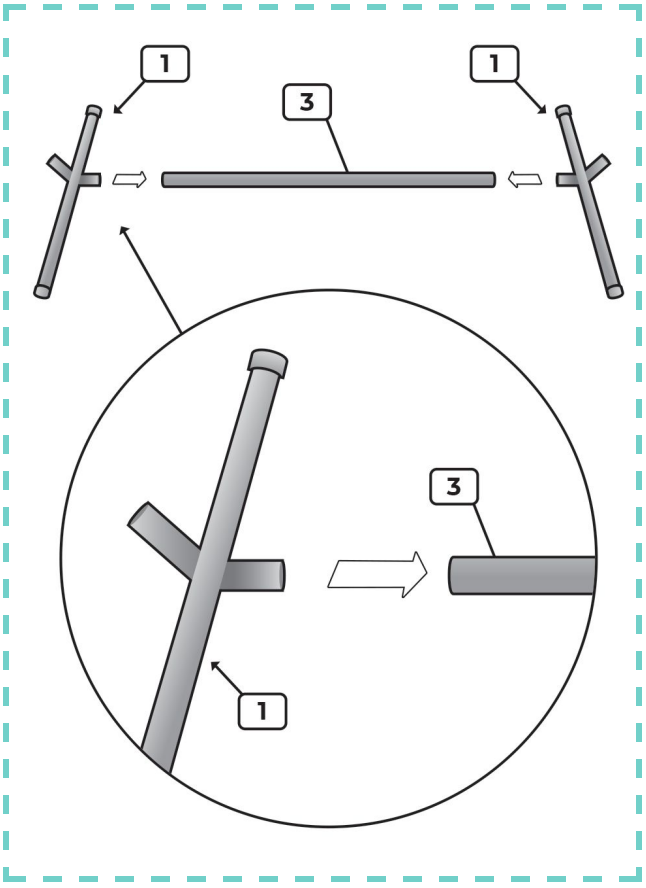
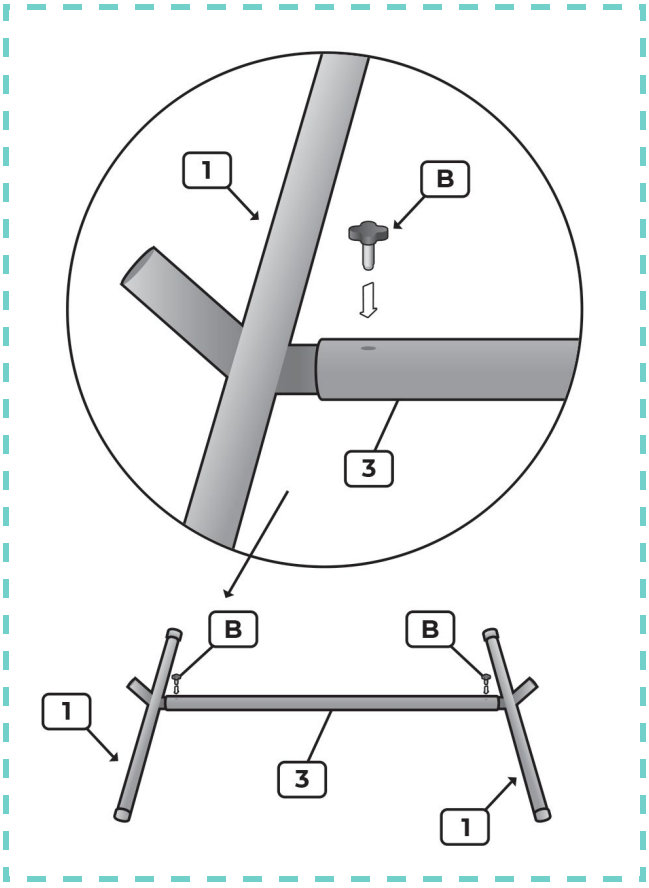
2